AIRSENSE / 19

SPECIFICATION SHEET

Features & Benefits

- Automatic Snow and Ice sensor
- Energy Efficient algorithm
- 24VAC operated
- Fitts to PYROSB metal rust-free mounting bracket or vertical pole
- Anti bird nesting spykes
- Plastic cap for the summer, protects from dust & dirt
- Up to 4 AIRSENSE/19 + 2 Ground sensors + 2 Gutter sensors can be chained into one PYROCON19 controller
- 4 wires installation – 30 ft. cable supplied with the sensor
- Simple user interface for parameters settings from PYROCON19 controller
- Adjustable RH sensitivity from PYROCON19 controller
- Adjustable set-point
- Technician testing / commissioning mode for easy and fast system test all year long (even during summer or at high temp)

Description

The AIRSENSE/19 is a stylish, smart and reliable Snow and Ice sensor. Installed outdoors it measures the temperature and detects snow, sending the information via the PYROCON19 controller to the heating elements.

The AIRSENSE/19 is connected to the Snow Melting Controller (PYROCON19) with a 30 feet (10 m.), 24V 4 wires cable and communicating with the controller, providing the temperature value and the snow detection based on the adjustable parameters.

The plastic "igloo" shape design helps to assure reliable Snow/Ice detection as it prevents from the snow to accumulate around the sensing area. The 4 holes around the sensors were designed to hold the Anti Nesting spikes, keeping birds away from the sensor.

The sensor cap helps to keep the sensing area clean from dust and dirt during summer time and when the snow melting system is not used.

WARMUP INC. 25 FRANCIS J CLARKE CIR SUITE A BETHEL, CT 06801

Tel.: 1-888-927-6333
Fax: 1-888-927-4721
us@warmup.com
www.warmup.com

The measured temperature and the snow detection are visible on the back-lit LCD display of the PYROCON19 controller.

The PYRO system can work with up to 4 AIRSENSE/19 Snow Sensors chained one after the other and link the 4 output zones of snow melting to the AIRSENSES.

Dimensions

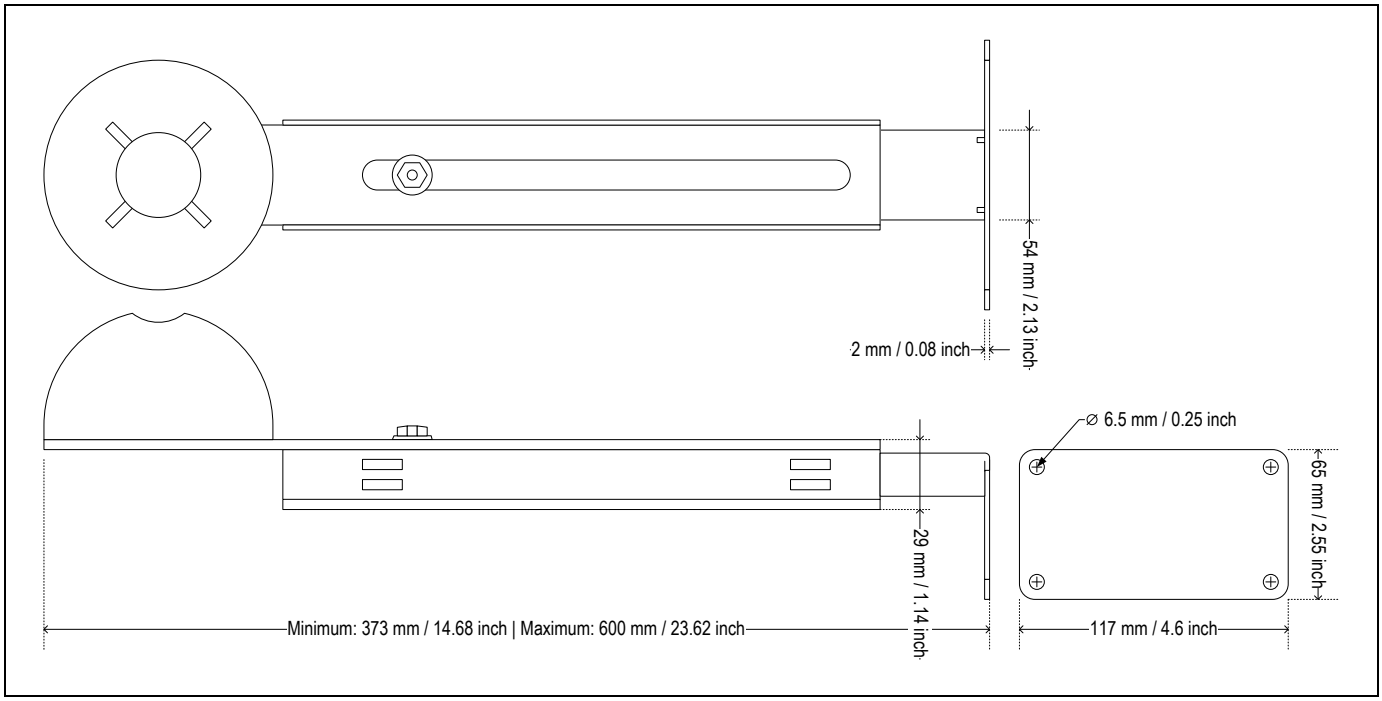

Technical specifications

Enclosure Protection	IP65, Outdoor Mounting	**Supply**	24VAC±20%,50-60Hz,4W
Entries	33 ft. (10 m) Four wires cable:	**Communication**	RS485
Material	2x18AWG supply wires 2x22AWG communication wires	**Operating temp.**	-40°F to 122°F (-40° C to 50°C)
Mounting	Outdoor mounting on *PYROSB* metal holder (by Warmup) or vertical pole	**Storage temp.**	–50°F to 158°F (–40°C to 70°C)
Material	Plastic: ASA WR9160 Metal: Galvanized cold rolled		

The performance specifications are nominal and conform to acceptable industry standards. For applications at conditions beyond these specifications, consult the local Warmup office or representative. Warmup shall not be liable for damages resulting from misapplication or misuse of its products.

This document is subject to change without any notice.

© Copyright 2024 Warmup Inc. All rights reserved.

WARMUP INC. 25 FRANCIS J CLARKE CIR SUITE A BETHEL, CT 06801
Tel.: 1-888-927-6333
Fax: 1-888-927-4721
us@warmup.com
www.warmup.com